http://www.adultpdf.com
Created by TIFF To PDF trial version, to remove this mark, please register this software.

A SURVEY OF A TRACT OF LAND IN THE SE ¼, SECTION 5, T19S-R3W, MCPHERSON COUNTY, KANSAS

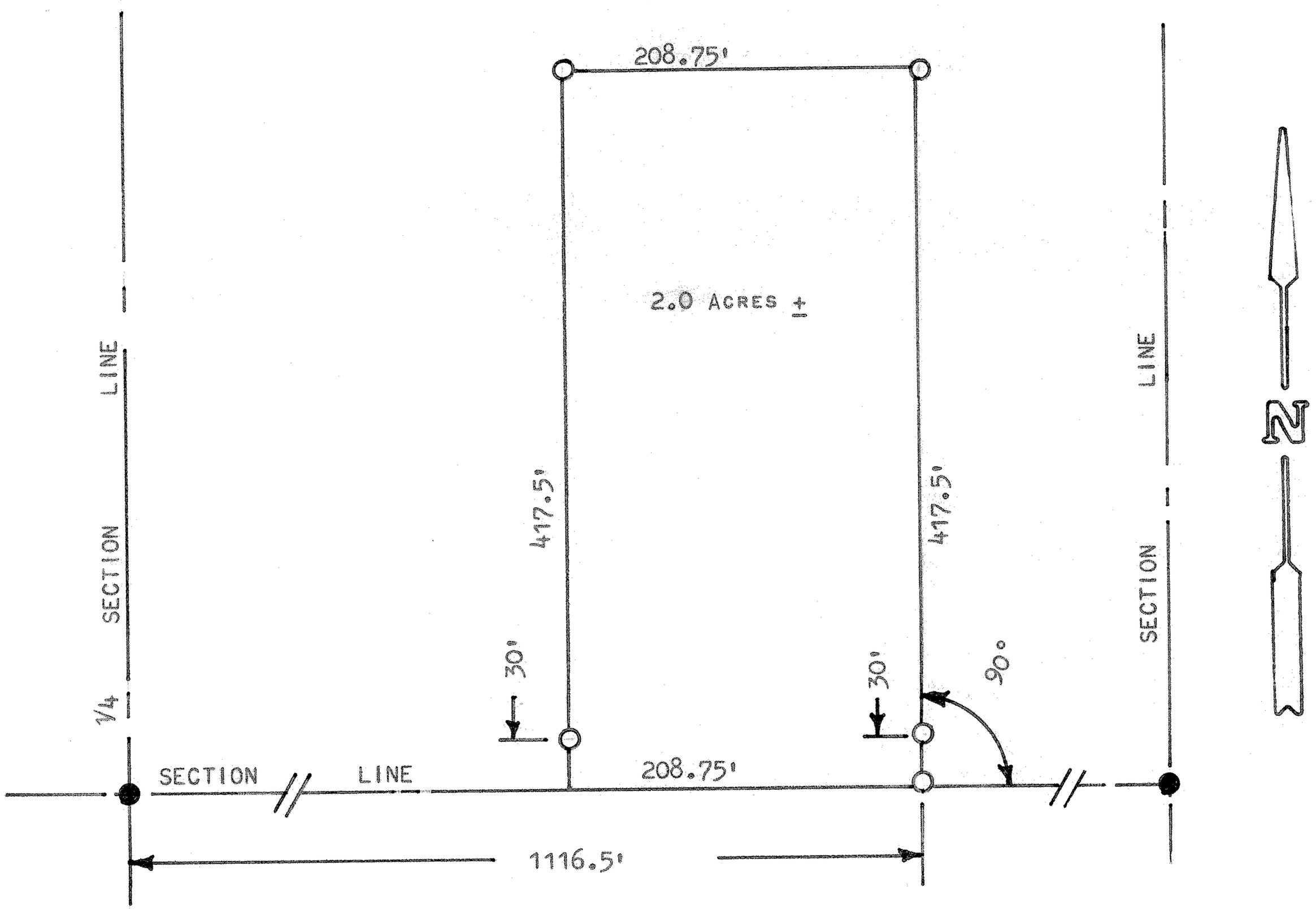

● PINS FOUND THIS SURVEY

○ PINS SET THIS SURVEY

STATE OF KANSAS)
COUNTY OF MCPHERSON) SS

I, MELVIN FERGUSON, COUNTY ENGINEER OF MCPHERSON COUNTY, KANSAS, DO HEREBY CERTIFY THAT UNDER MY SUPERVISION A SURVEY WAS MADE OF A TRACT OF LAND IN THE SE ¼ OF SECTION 5, T19S-R3W, OF THE 6TH P.M., AND DESCRIBED AS FOLLOWS:

COMMENCING AT THE SW CORNER OF SAID SE ¼, SECTION 5, T19S-R3W, THENCE EAST ON SECTION LINE 1116.5 FEET TO A POINT OF BEGINNING; THENCE NORTH, AT RIGHT ANGLES TO SECTION LINE, 417.5 FEET; THENCE WEST, PARALLEL WITH SECTION LINE, 208.75 FEET; THENCE SOUTH, AT RIGHT ANGLES TO SECTION LINE 417.5 FEET; THENCE EAST, ON SECTION LINE, 208.75 FEET, TO POINT OF BEGINNING. SAID TRACT CONTAINS 2.0 ACRES, MORE OR LESS.

I ALSO CERTIFY THAT THE ABOVE PLAT IS A TRUE EXHIBIT OF SAID SURVEY AS FAR AS IT IS KNOWN TO ME.

SURVEY CALLED FOR BY DARRELL THOMPSON.

SIGNED THIS 24th DAY OF JUNE, 1974.

Melvin Ferguson

MELVIN FERGUSON
COUNTY ENGINEER
MCPHERSON COUNTY, KANSAS

MELVIN FERGUSON LICENSED 8772 KANSAS PROFESSIONAL ENGINEER

MICROFILM