http://www.adultpdf.com
Created by TIFF To PDF trial version, to remove this mark, please register this software.

SURVEY TRACT OF LAND IN THE
NW1/4, SECTION 19, T19S, R3W
MCPHERSON COUNTY

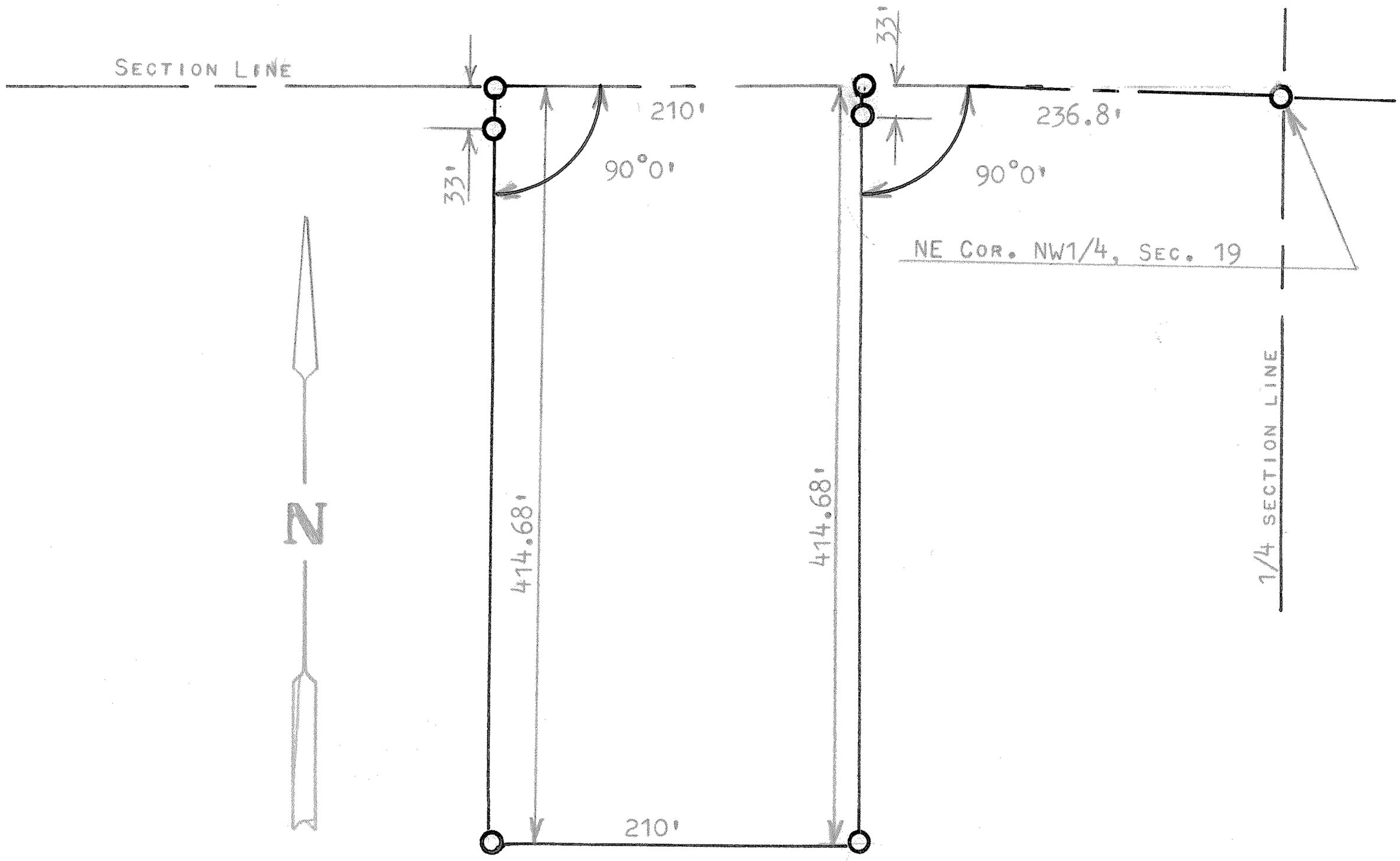

O PINS FOUND OR SET THIS SURVEY

STATE OF KANSAS
COUNTY OF MCPHERSON

I. FRANCIS RANKIN, PROFESSIONAL ENGINEER OF THE STATE OF KANSAS DO HEREBY CERTIFY THAT UNDER MY SUPERVISION A SURVEY WAS MADE IN THE NW1/4, SECTION 19, T19S, R3W OF THE 6THP.M. AND DESCRIBED AS FOLLOWS;

BEGINNING 236.8 FEET WEST OF THE NE CORNER OF SAID NW1/4, SECTION 19, T19S R3W; THENCE RIGHT ANGLE SOUTH 414.86 FEET; THENCE WEST PARALLEL WITH SECTION LINE 210.0 FEET; THENCE NORTH TO SECTION LINE 414.86 FEET; THENCE EAST ON SECTION LINE 210.0 FEET TO PLACE OF BEGINNING, SAID TRACT OF LAND CONTAINS 2.0 ACRES MORE OR LESS, AND THAT THE ACCOMPANYING PLAT IS A TRUE EXHIBIT OF SAID SURVEY AS FAR AS IT IS KNOWN TO ME.

SURVEY CALLED FOR BY CARL WEIS

SIGNED THIS 22 DAY OF JULY, 1968

FRANCIS RANKIN
PROFESSIONAL ENGINEER
McPHERSON COUNTY

F. R. Rankin

F. R. RANKIN
LICENSED
799
KANSAS
PROFESSIONAL ENGINEER

MICROFILM