http://www.adultpdf.com
Created by TIFF To PDF trial version, to remove this mark, please register this software.

A SURVEY OF A TRACT OF LAND IN THE SW1/4, SECTION 32, T18S, R2W MCPHERSON COUNTY, KANSAS

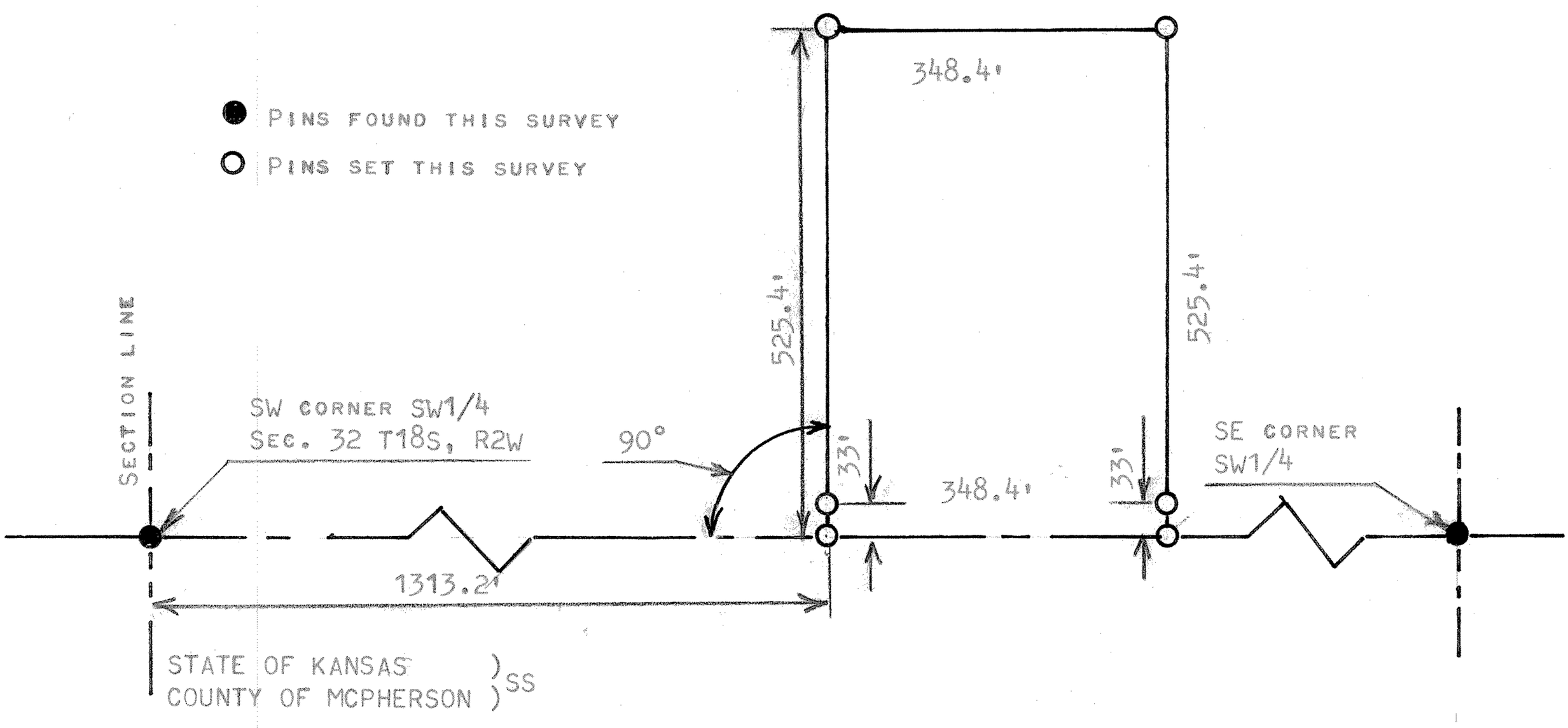

STATE OF KANSAS)
COUNTY OF MCPHERSON) SS

I, MELVIN FERGUSON, PROFESSIONAL ENGINEER OF THE STATE OF KANSAS DO HEREBY CERTIFY THAT UNDER MY SUPERVISION A SURVEY WAS MADE IN THE SW1/4, SECTION 32, T18S R2W OF THE 6TH P.M. AND DESCRIBED AS FOLLOWS;

BEGINNING 1313.2 FEET EAST OF THE SW CORNER OF SAID SW1/4, SECTION 32, T18S, R2W; THENCE RIGHT ANGLE NORTH 525.4 FEET; THENCE EAST PARALLEL WITH SECTION LINE 348.4 FEET; THENCE SOUTH TO SECTION LINE 525.4 FEET; THENCE WEST ON SECTION LINE 348.4 FEET AND TO PLACE OF BEGINNING, SAID TRACT OF LAND CONTAINS 4.2 ACRES MORE OR LESS, AND THAT THE ABOVE PLAT IS A TRUE EXHIBIT OF SAID SURVEY AS FAR AS IT IS KNOWN TO ME.

SURVEY CALLED FOR V. LARSON REALSTATE

SIGNED THIS 16th DAY OF AUGUST, 1979

Melvin Ferguson
MELVIN FERGUSON
PROFESSIONAL ENGINEER
MCPHERSON, KANSAS

MELVIN V. FERGUSON LICENSED 6772 KANSAS PROFESSIONAL ENGINEER

MICROFILMED