http://www.adultpdf.com
Created by TIFF To PDF trial version, to remove this mark, please register this software.

A SURVEY OF A TRACT OF LAND IN THE SE1/4, SECTION 27, T17S, R4W MCPHERSON COUNTY, KANSAS

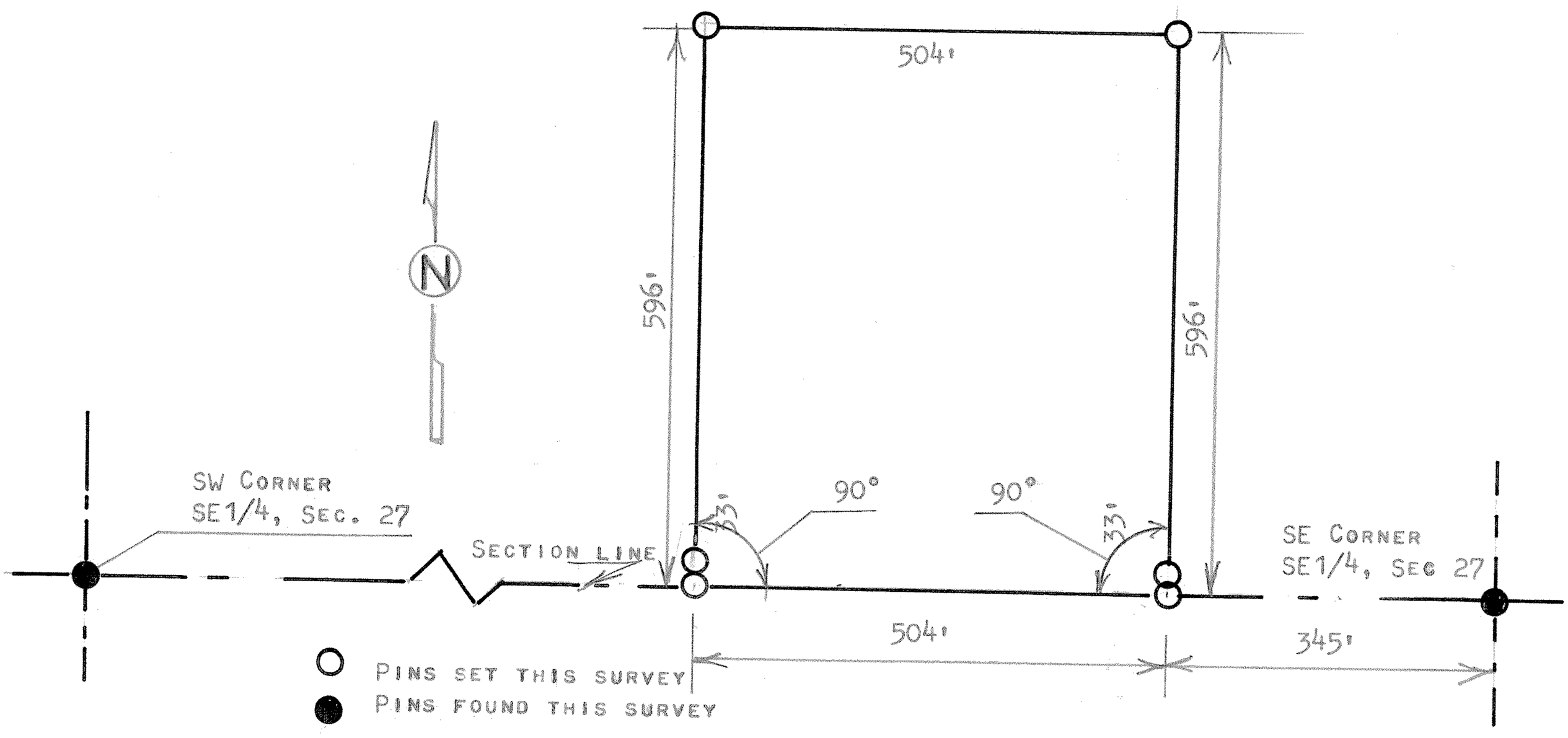

STATE OF KANSAS)
COUNTY OF MCPHERSON) SS

I, MELVIN FERGUSON, PROFESSIONAL ENGINEER OF THE STATE OF KANSAS DO HEREBY CERTIFY THAT UNDER MY SUPERVISION A SURVEY WAS MADE OF A TRACT OF LAND IN THE SE1/4, SECTION 27, T17S, R4W OF THE 6TH P.M. AND DESCRIBED AS FOLLOWS;

COMMENCING AT THE SE CORNER OF THE SE1/4, SECTION 27, T17S, R4W; THENCE WEST ON SECTION LINE 345 FEET FOR THE PLACE OF BEGINNING; THENCE CONTINUING WEST ON SECTION LINE 504 FEET; THENCE RIGHT ANGLE TO THE NORTH 596 FEET; THENCE EAST PARALLEL WITH SECTION LINE 504 FEET; THENCE SOUTH TO SECTION LINE 596 FEET AND TO PLACE OF BEGINNING SAID TRACT OF LAND CONTAINS 6.9 ACRES MORE OR LESS, AND THAT THE ACCOMPANYING PLAT IS TRUE EXHIBIT OF SAID SURVEY AS FAR AS IT IS KNOWN TO ME.

SURVEY CALLED FOR BY ROLANDER ANDERSON AGENCY

SIGNED THIS 22nd DAY OF AUGUST, 83

Melvin Ferguson
MELVIN FERGUSON
PROFESSIONAL ENGINEER
McPHERSON, KANSAS

MELVIN V. FERGUSON
LICENSED
6772
KANSAS
PROFESSIONAL ENGINEER