http://www.adultpdf.com
Created by TIFF To PDF trial version, to remove this mark, please register this software.

A SURVEY OF A TRACT OF LAND IN THE
NW1/4, SECTION 23, T21S R5W
MCPHERSON COUNTY, KANSAS

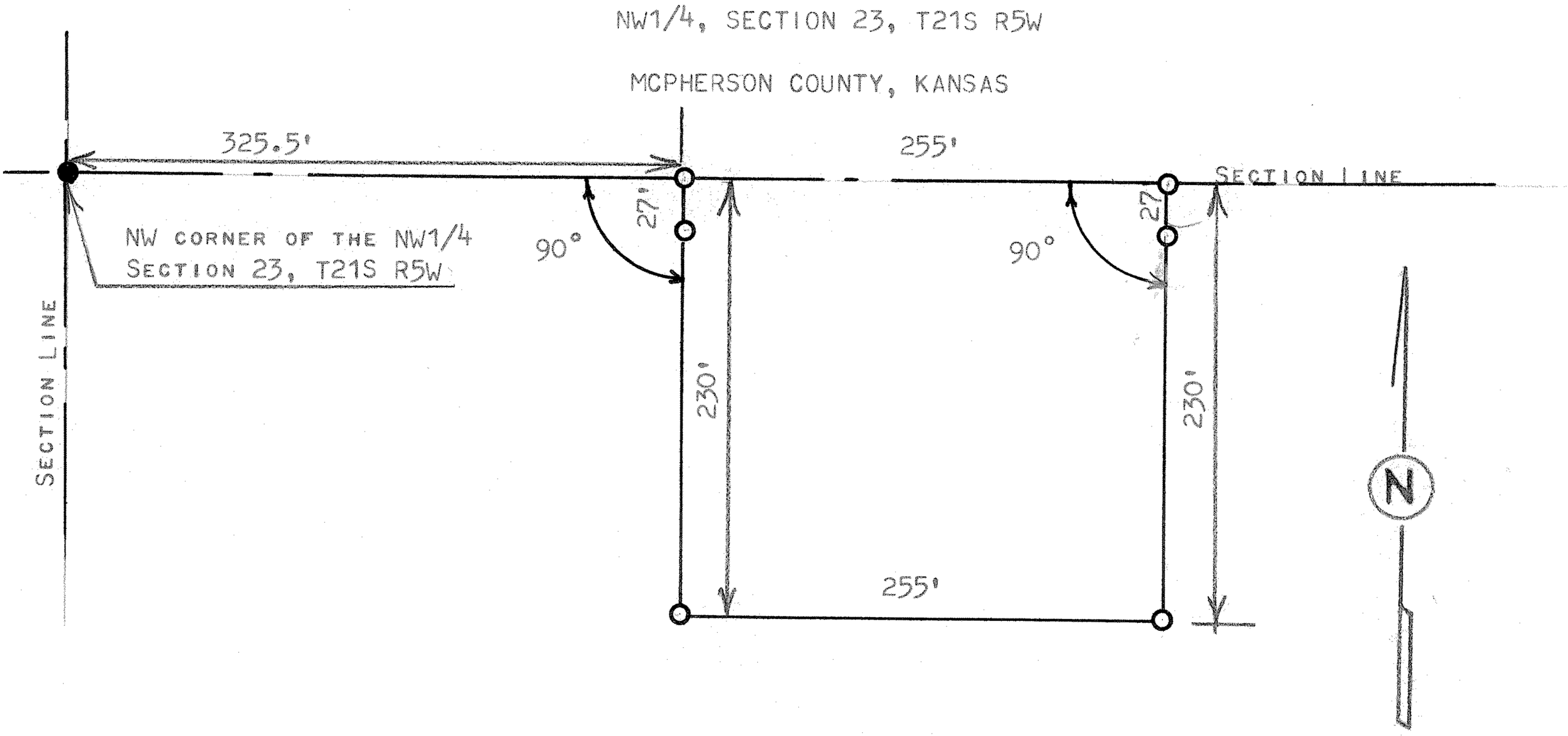

○ PINS SET THIS SURVEY
● PINS FOUND THIS SURVEY

STATE OF KANSAS)
COUNTY OF MCPHERSON) SS

I, MELVIN FERGUSON, PROFESSIONAL ENGINEER OF THE STATE OF KANSAS DO HEREBY CERTIFY THAT UNDER MY SUPERVISION A SURVEY WAS MADE OF A TRACT OF LAND IN THE NW1/4, SECTION 23, T21S, R5W OF THE 6TH P.M. AND DESCRIBED AS FOLLOWS:
BEGINNING 325.5 FEET EAST OF THE NW CORNER OF SAID NW1/4, SECTION 23, T21S, R5W; THENCE RIGHT ANGLE SOUTH 230 FEET; THENCE EAST PARALLEL WITH SECTION LINE 255 FEET; THENCE NORTH TO SECTION LINE 230 FEET; THENCE WEST 255 FFET TO PLACE OF BEGINNING SAID TRACT OF LAND CONTAINS 1.35 ACRES MORE OR LESS, AND THAT THE ABOVE PLAT IS A TRUE EXHIBIT OF SAID SURVEY AS FAR AS IT IS KNOWN TO ME.

SURVEY CALLED FOR BY E.T. KLASSEN

SIGNED THIS 12th DAY OF JANUARY, 1976

Melvin Ferguson
MELVIN FERGUSON
PROFESSIONAL ENGINEER
MCPHERSON, KANSAS

MELVIN V. FERGUSON
LICENSED
6772
KANSAS
PROFESSIONAL ENGINEER

MICROFILM