http://www.adultpdf.com
Created by TIFF To PDF trial version, to remove this mark, please register this software.

A SURVEY OF A TRACT OF LAND IN THE SW1/4, SECTION 5, T21S, R3W MCPHERSON COUNTY, KANSAS

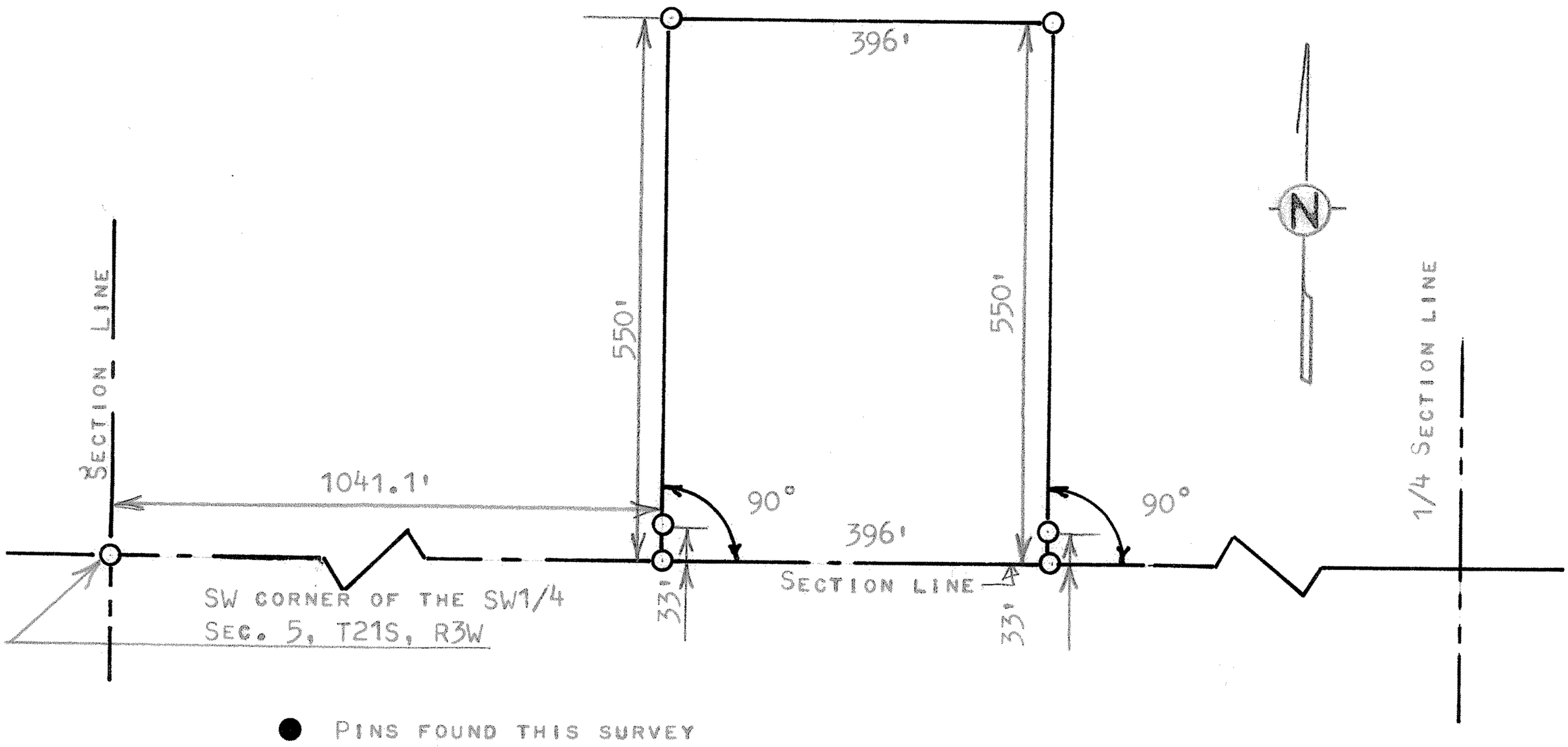

● PINS FOUND THIS SURVEY

○ PINS SET THIS SURVEY

I, MELVIN FERGUSON, PROFESSIONAL ENGINEER OF THE STATE OF KANSAS DO HEREBY CERTIFY THAT UNDER MY SUPERVISION A SURVEY WAS MADE OF A TRACT OF LAND IN THE SW1/4, SECTION 5, T21S, R3W OF THE 6TH P.M. AND DESCRIBED AS FOLLOWS;

BEGINNING 1041.1 FEET EAST OF THE SW CORNER OF SAID SW1/4, SECTION 5, T21S, R3W; THENCE RIGHT ANGLE NORTH 550 FEET; THENCE EAST PARALLEL WITH SECTION LINE 396 FEET; THENCE SOUTH TO SECTION LINE 550 FEET; THENCE WEST ON SECTION LINE 396 FEET TO THE PLACE OF BEGINNING, SAID TRACT OF LAND CONTAINS 5.0 ACRES MORE OR LESS, AND THAT THE ACCOMPANYING PLAT IS A TRUE EXHIBIT OF SAID SURVEY AS FAR AS IT IS KNOWN TO ME.

SURVEY CALLED FOR BY MCPHERSON REALTY (STUCKY)

SIGNED THIS 13th DAY OF APRIL, 1977

MELVIN FERGUSON
PROFESSIONAL ENGINEER
MCPHERSON, KANSAS

MELVIN V. FERGUSON
REGISTERED
LS-310
KANSAS
LAND SURVEYOR

MICROFILM