http://www.adultpdf.com
Created by TIFF To PDF trial version, to remove this mark, please register this software.

A SURVEY OF A TRACT OF LAND IN THE
SW1/4, SECTION 25, T20S, R5W
McPHERSON COUNTY, KANSAS

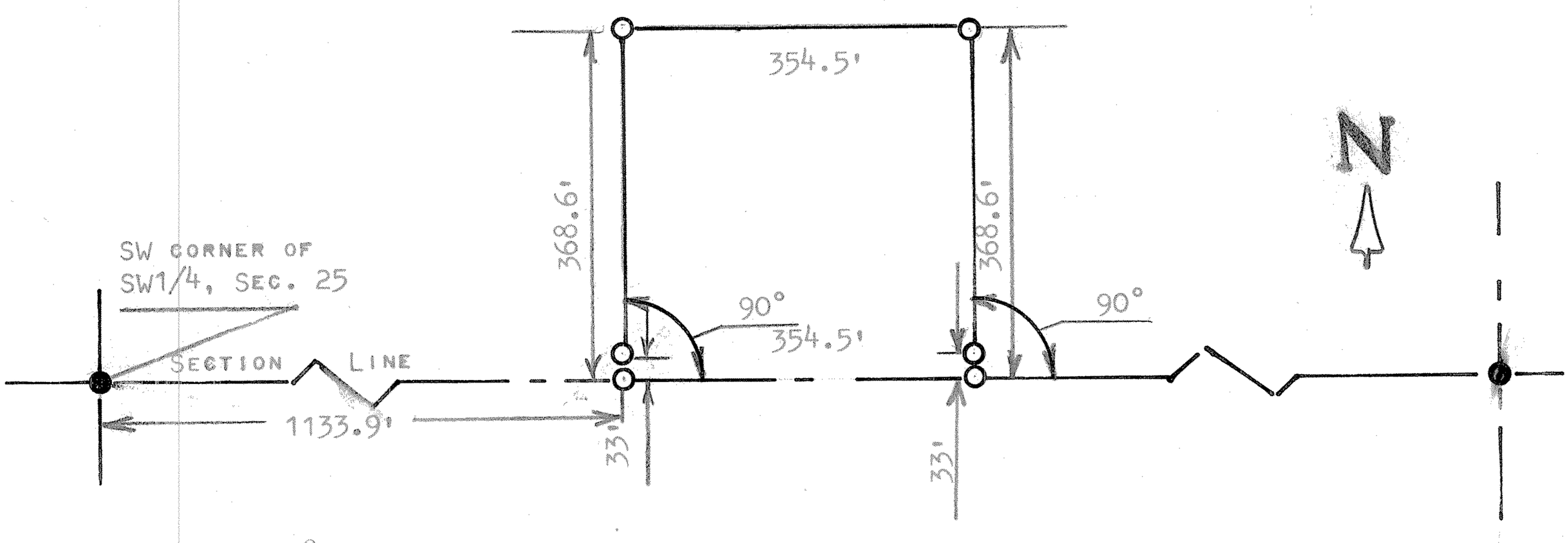

● CORNERS FOUND THIS SURVEY

○ PINS SET THIS SURVEY

STATE OF KANSAS)
COUNTY OF MCPHERSON) SS

I, MELVIN FERGUSON, PROFESSIONAL ENGINEER OF THE STATE OF KANSAS DO HEREBY CERTIFY THAT UNDER MY SUPERVISION A SURVEY WAS MADE OF A TRACT OF LAND IN THE SW1/4, SECTION 25, T20S, R5W OF THE 6TH.P.M. AND DESCRIBED AS FOLLOWS;

BEGINNING 1133.9 FEET EAST OF THE SW CORNER OF SAID SW1/4, SECTION 25, T20S R5W; THENCE RIGHT ANGLE NORTH AND DISTANCE OF 368.6 FEET; THENCE EAST PARALLEL WITH SECTION LINE 354.5 FEET; THENCE SOUTH TO SECTION LINE 368.6 FEET; THENCE WEST 354.5 FEET TO PLACE OF BEGINNING, SAID TRACT OF LAND CONTAINS 3.0 ACRES MORE OR LESS, AND THAT THE ACCOMPANYING PLAT IS A TRUE EXHIBIT OF SAID SURVEY AS FAR AS IT IS KNOWN TO ME.
SURVEY CALLED FOR BY ROBERT MARTINS

SIGNED THIS 9th DAY OF NOVEMBER, 1979

Melvin Ferguson
MELVIN FERGUSON
PROFESSIONAL ENGINEER
McPHERSON, KANSAS

MELVIN V. FERGUSON
LICENSED
6772
KANSAS
PROFESSIONAL ENGINEER