http://www.adultpdf.com
Created by TIFF To PDF trial version, to remove this mark, please register this software.

A SURVEY OF A TRACT OF LAND IN THE NW1/4
SECTION 1, T20S, R4W, MCPHERSON, KANSAS

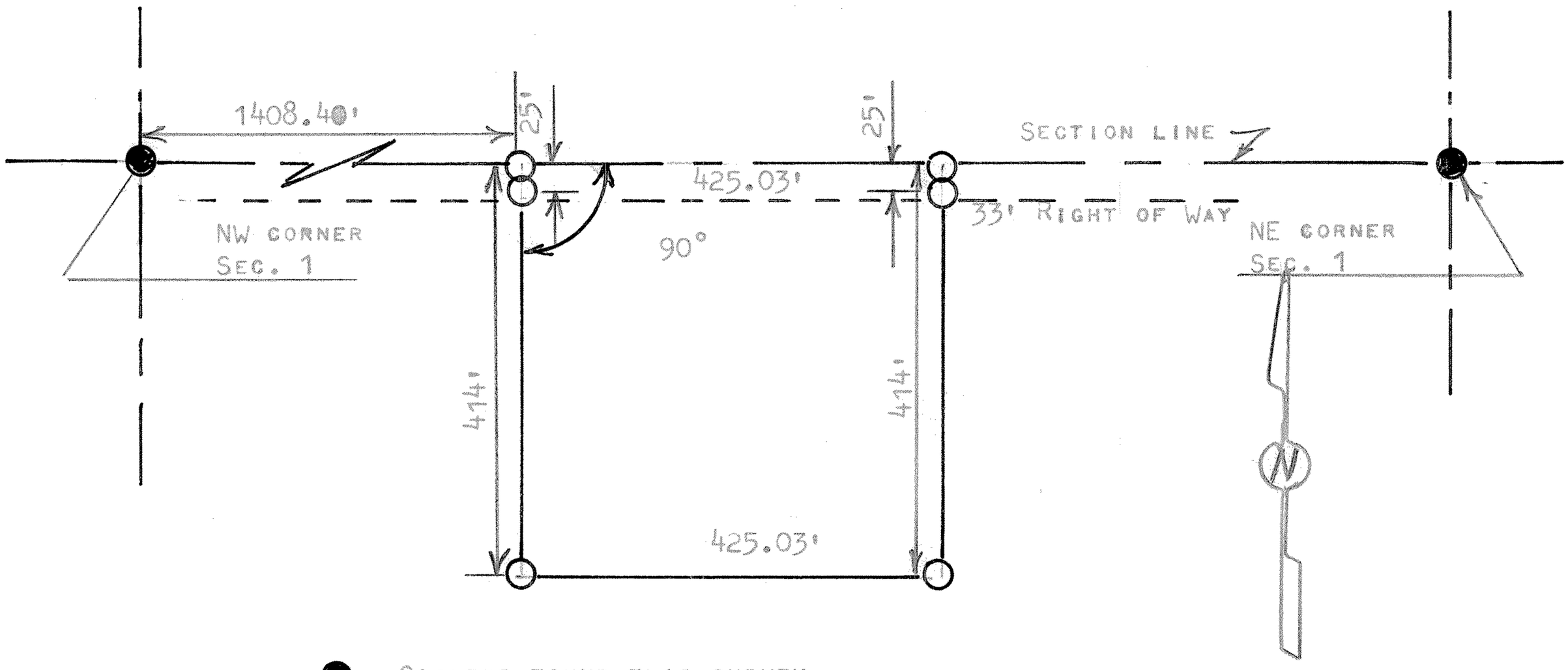

● CORNERS FOUND THIS SURVEY

○ PINS SET THIS SURVEY

STATE OF KANSAS)
COUNTY OF MCPHERSON) SS

I, MELVIN FERGUSON, PROFESSIONAL ENGINEER OF THE STATE OF KANSAS DO DO HEREBY CERTIFY THAT UNDER MY SUPERVISION A SURVEY WAS MADE OF A TRACT OF LAND IN THE NW1/4, SECTION 1, T20S, R4W OF THE 6TH P.M. AND DESCRIBED AS FOLLOWS;
BEGINNING 1408.40 FEET EAST OF THE NW CORNER OF SAID NW1/4, SECTION 1, T20S, R4W; THENCE RIGHT ANGLE SOUTH 414 FEET; THENCE EAST PARALLEL WITH SECTION LINE 425.03 FEET; THENCE NORTH TO SECTION LINE 414 FEET; THENCE WEST ON SECTION LINE 425.03 FEET, AND TO PLACE OF BEGINNING, SAID TRACT OF LAND CONTAINS 4.04 ACRES MORE OR LESS, AND THE ABOVE PLAT IS A TRUE EXHIBIT OF SAID SURVEY AS FAR AS IT IS KNOWN TO ME.
SURVEY CALLED FOR BY MOORS

SINGED THIS 27th DAY MAY 1980

Melvin Ferguson
MELVIN FERGUSON
PROFESSIONAL ENGINEER
MCPHERSON, KANSAS

MELVIN V. FERGUSON
LICENSED
6772
KANSAS
PROFESSIONAL ENGINEER