SURVEY NW 1/4 SECTION 29, T19S, R4W
MC PHERSON, KANSAS

http://www.adultpdf.com
Created by TIFF To PDF trial version, to remove this mark, please register this software.

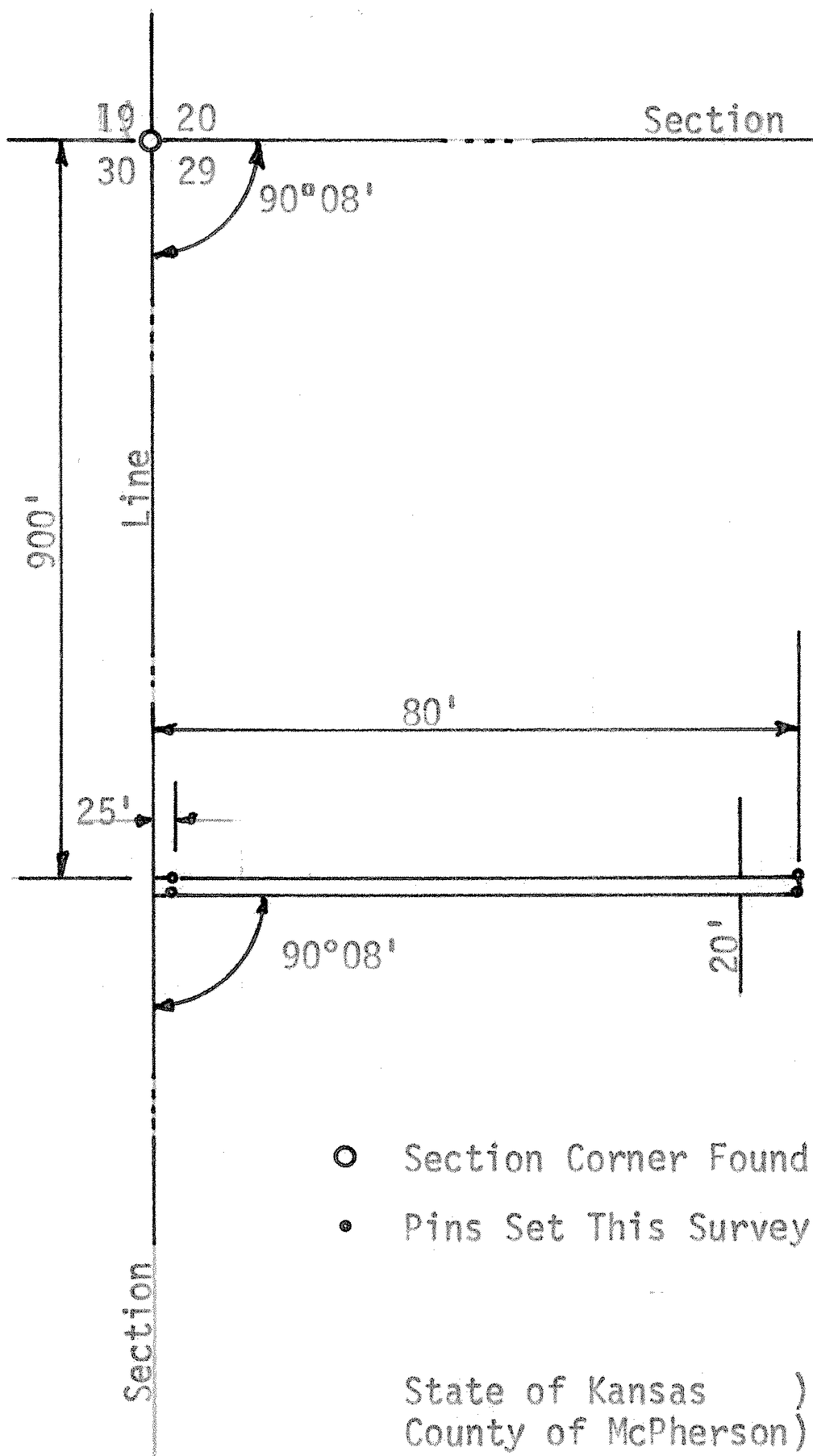

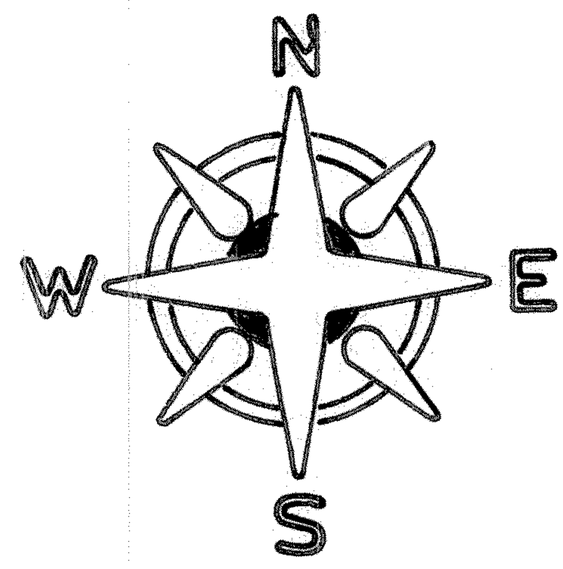

State of Kansas)
County of McPherson) SS

I, F. R. Rankin, County Engineer of McPherson County, Kansas, do hereby certify that under my supervision a survey was made in the NW 1/4 of Section 29, T19S, R4W of the 6th P.M. and described as follows:

Commencing at the NW corner of said NW 1/4; thence South 900 feet to a place of beginning; thence East parallel with the North line of said NW 1/4 800 feet; thence South 20 feet; thence West 800 feet to the West line of said NW 1/4; thence North 20 feet to the place of beginning. The land herein described contains 0.37 acres and the above plat is a true exhibit of said survey as far as it is known to me.

Survey requested by Francis Melland

Signed this 7 day of December 1973

F. R. Rankin

F. R. Rankin, P. E.
Administrator of P.W. & Co. Engr.
McPherson, Kansas

F. R. RANKIN
LICENSED
KANSAS
PROFESSIONAL ENGINEER

MICROFILM