http://www.adultpdf.com
Created by TIFF To PDF trial version, to remove this mark, please register this software.

SURVEY TRACT OF LAND IN SECTION 6 T19S R3W
MCPHERSON COUNTY, KANSAS

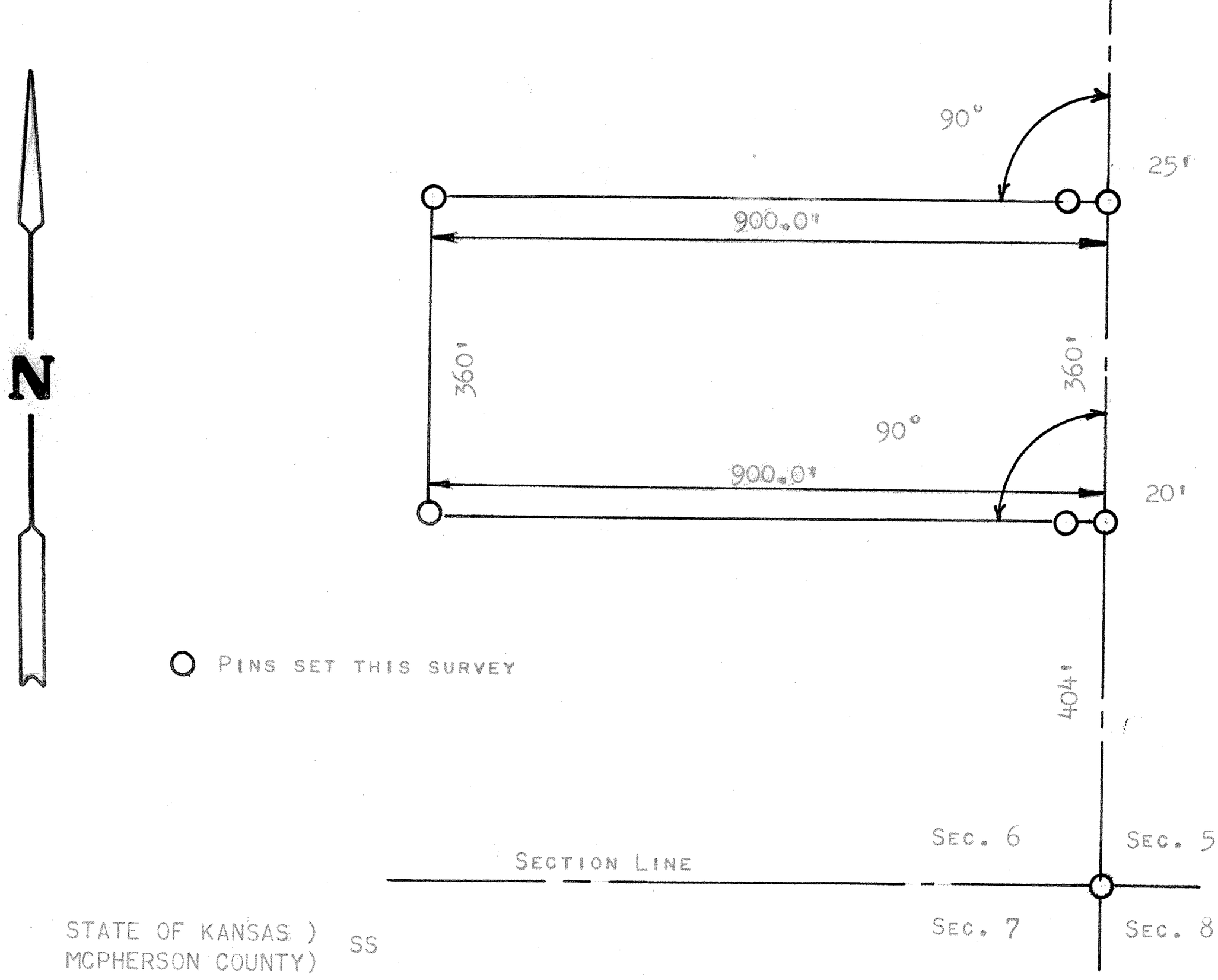

STATE OF KANSAS)
MCPHERSON COUNTY) SS

I, FRANCIS RANKIN, PROFESSIONAL ENGINEER OF THE STATE OF KANSAS DO HEREBY CERTIFY THAT UNDER MY SUPERVISION A SURVEY WAS MADE OF A TRACT OF LAND IN THE SE 1/4 SECTION 6, T19S R3W OF THE 6TH P.M. AND DESCRIBED AS FOLLOWS;
COMMENCINT AT A POINT 404.0 FEET NORTH OF THE SE CORNER OF THE SE 1/4 OF SAID SECTION 6, T19S R3W, FOR PLACE OF BEGINNING; THENCE RIGHT ANGLE WEST 900.0 FEET; THENCE NORTH PARALLEL WITH SECTION LINE 360.0 FEET; THENCE EAST TO SECTION LINE 900.0 FEET; THENCE SOUTH ON SECTION LINE 360.0 FEET TO PLACE OF BEGINNING, SAID TRACT CONTAINS 7.44 ACRES MORE OR LESS, AND THAT THE ABOVE PLAT IS A TRUE EXHIBIT OF SAID SURVEY AS FAR AS IT IS KNOWN TO ME.
SURVEY CALLED FOR BY PETE GOERING

SIGNED THIS 10 DAY OF APRIL, 1967

FRANCIS RANKIN
PROFESSIONAL ENGINEER
MCPHERSON, KANSAS

F. R. RANKIN
LICENSED
753
KANSAS
PROFESSIONAL ENGINEER

MICROFILM