http://www.adultpdf.com
Created by TIFF To PDF trial version, to remove this mark, please register this software.

A SURVEY IN THE NW1/4 OF SECTION 4, T19S - R3W McPHERSON COUNTY, KANSAS

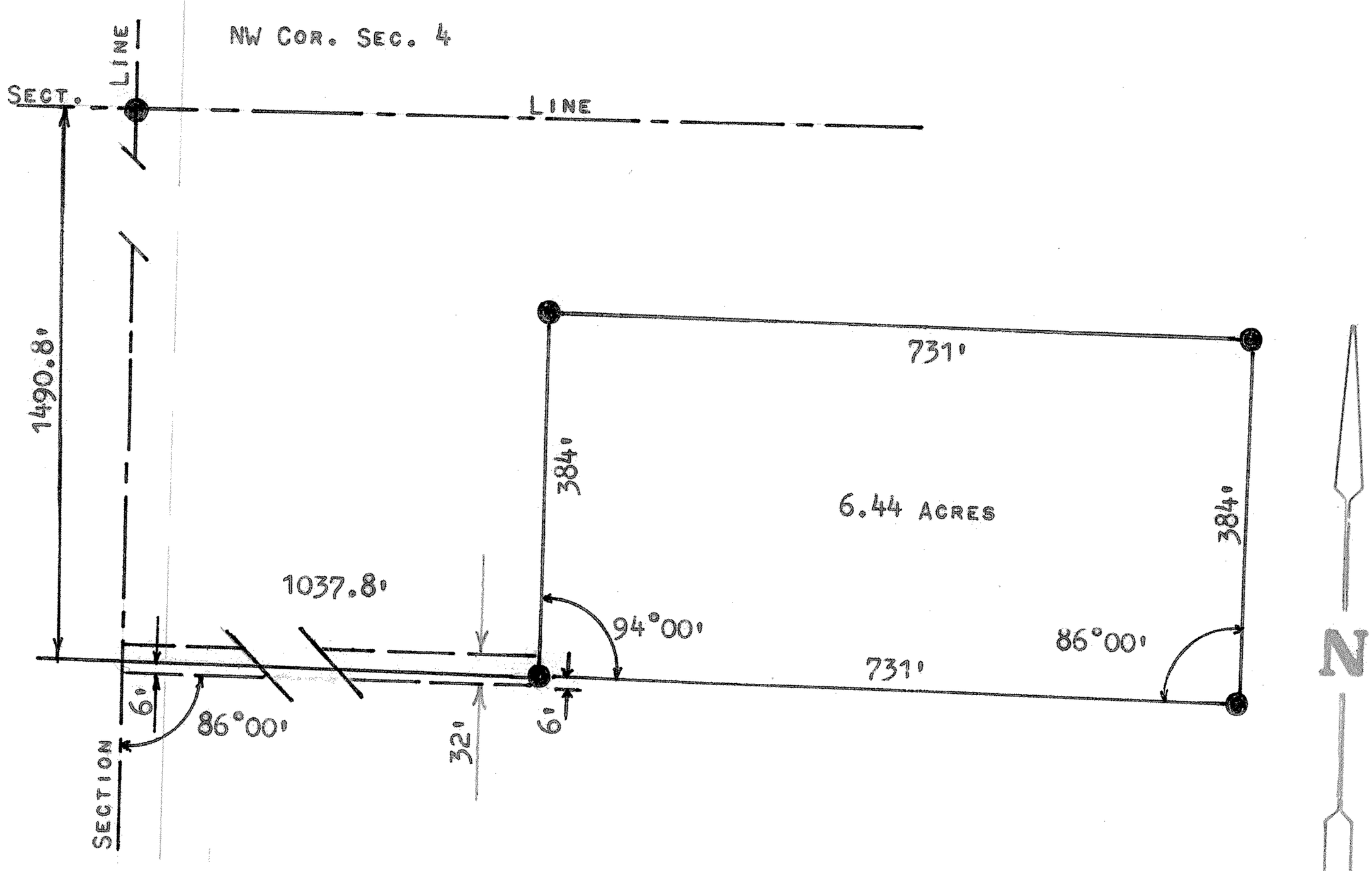

● PINS SET THIS SURVEY

○ PINS FOUND THIS SURVEY

STATE OF KANSAS)
COUNTY OF McPHERSON) SS

I, MELVIN FERGUSON, COUNTY ENGINEER OF McPHERSON CO., KANSAS, DO HEREBY CERTIFY THAT UNDER MY SUPERVISION A SURVEY OF A TRACT OF LAND AND AN EASEMENT WAS MADE IN THE NW 1/4 OF SECTION 4, T19S-R3W OF THE 6TH P.M. AND DESCRIBED AS FOLLOWS:

TRACT- COMMENCING AT THE NW CORNER OF SAID SECTION 4, T19S-R3W, THENCE SOUTH, ON SECTION LINE, 1490.8 FEET AND EAST, AT AN EXTERIOR ANGLE OF 86°00', 1037.8 FEET FOR A PLACE OF BEGINNING, THENCE CONTINUEING EAST 731.0 FEET; THENCE NORTH, PARALLEL WITH THE WEST SECTION LINE, 384.0 FEET; THENCE WEST, PARALLEL WITH THE SOUTH LINE, 731.0 FEET; THENCE SOUTH 384.0 FEET TO THE PLACE OF BEGINNING. SAID TRACT CONTAINS 6.44 ACRES MORE OR LESS.

EASEMENT- BEGINNING AT A POINT 1496.8 FEET SOUTH OF THE NW CORNER OF SAID SECTION 4, T19S - R3W, THENCE EAST, AT AN EXTERIOR ANGLE OF 86°00', 1037.8 FEET; THENCE NORTH 32 FEET; THENCE WEST, PARALLEL WITH THE SOUTH LINE, 1037.8 FEET TO THE SECTION LINE; THENCE SOUTH 32 FEET TO THE PLACE OF BEGINNING.

I ALSO CERTIFY THAT THE ABOVE PLAT IS A TRUE EXHIBIT OF SAID SURVEY AS FAR AS IT IS KNOWN TO ME.

SURVEY CALLED FOR BY JAY BREMYER, ATTY.

SIGNED ON THIS 3rd DAY OF SEPTEMBER, 1974.

Melvin Ferguson
MELVIN FERGUSON
COUNTY ENGINEER
McPHERSON CO., KANSAS

MELVIN V. FERGUSON LICENSED 6772 KANSAS PROFESSIONAL ENGINEER

MICROFILM