http://www.adultpdf.com
Created by TIFF To PDF trial version, to remove this mark, please register this software.

A TRACT OF LAND IN THE SW1/4, NW1/4 OF
SECTION 22, T19S-R3W

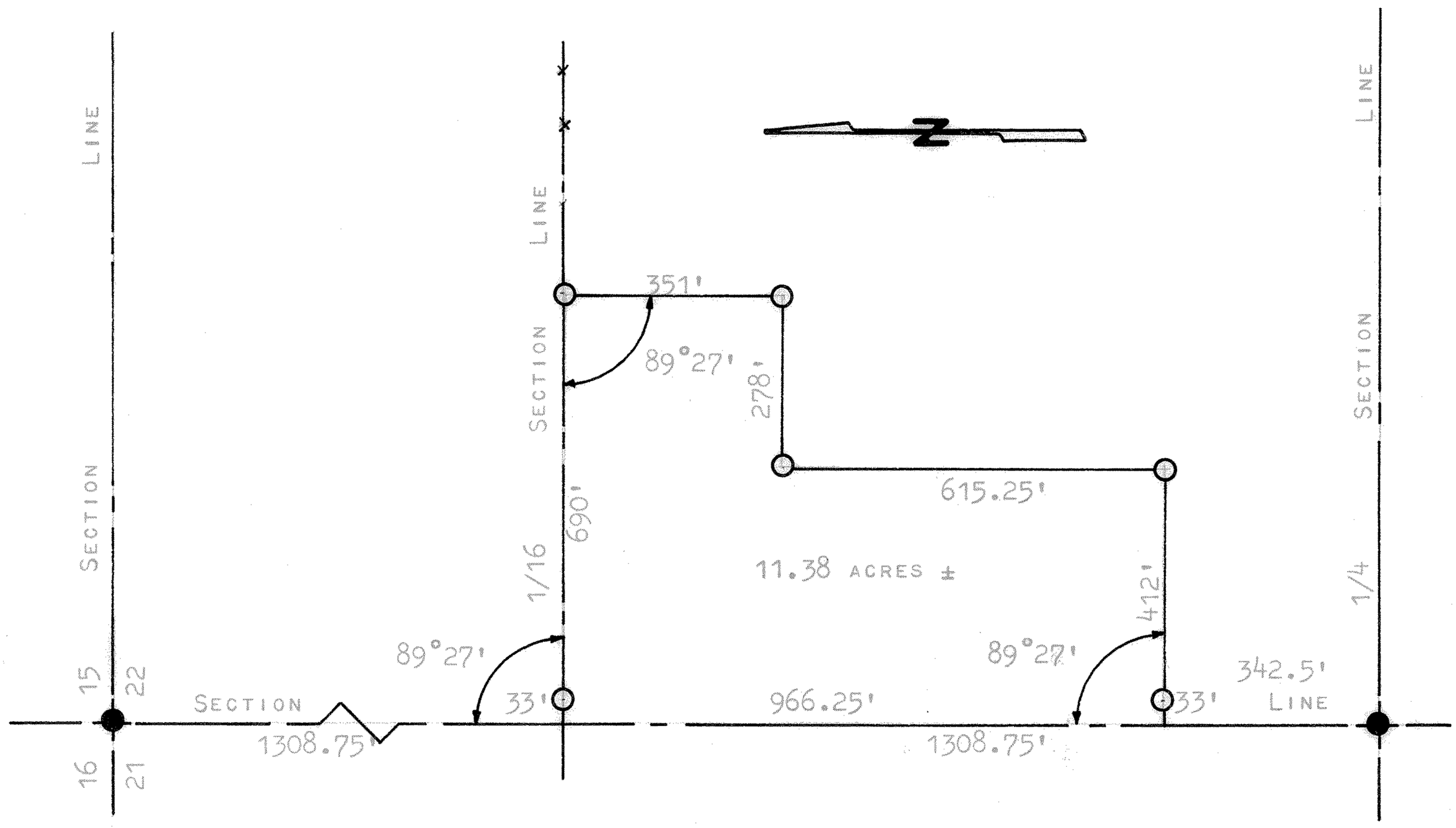

● PINS FOUND THIS SURVEY

○ PINS SET THIS SURVEY

STATE OF KANSAS)
COUNTY OF MCPHERSON) SS

I, FRANCIS, RANKIN, PROFESSIONAL ENGINEER OF THE STATE OF KANSAS, DO HEREBY CERTIFY THAT UNDER MY SUPERVISION A SURVEY WAS MADE IN THE SW1/4, NW1/4, SECTION 22, T19S-R3W, OF THE 6TH P.M. AND DESCRIBED AS FOLLOWS:

BEGINNING 342.5 FEET NORTH OF THE SW CORNER OF SAID SW1/4, NW1/4, OF SECTION 22, T19S-R3W; THENCE NORTH, ON SECTION LINE 966.25 FEET TO 1/16 LINE, THENCE EAST, ON 1/16 LINE, 690.0 FEET, THENCE SOUTH, PARALLEL WITH WEST SECTION LINE, 351.0 FEET, THENCE WEST, PARALLEL WITH 1/16 LINE, 278.0 FEET, THENCE SOUTH, PARALLEL WITH WEST SECTION LINE, 615.25 FEET, THENCE WEST 412.0 FEET TO PLACE OF BEGINNING, SAID TRACT OF LAND CONTAINS 11.38 ACRES MORE OR LESS, AND THAT THE ACCOMPANYING PLAT IS A TRUE EXHIBIT OF SAID SURVEY AS FAR AS IT IS KNOWN TO ME.

SURVEY CALLED FOR BY VICTOR LARSON

SIGNED THIS 23 DAY OF MAY, 1967.

FRANCIS RANKIN
PROFESSIONAL ENGINEER
MCPHERSON, KANSAS

F. R. RANKIN
LICENSED
799
KANSAS
PROFESSIONAL ENGINEER

MICROFILM