http://www.adultpdf.com
Created by TIFF To PDF trial version, to remove this mark, please register this software.

# A SURVEY OF A TRACT OF LAND IN THE SW 1/4, SECTION 21, T17S R4W MCPHERSON COUNTY, KANSAS

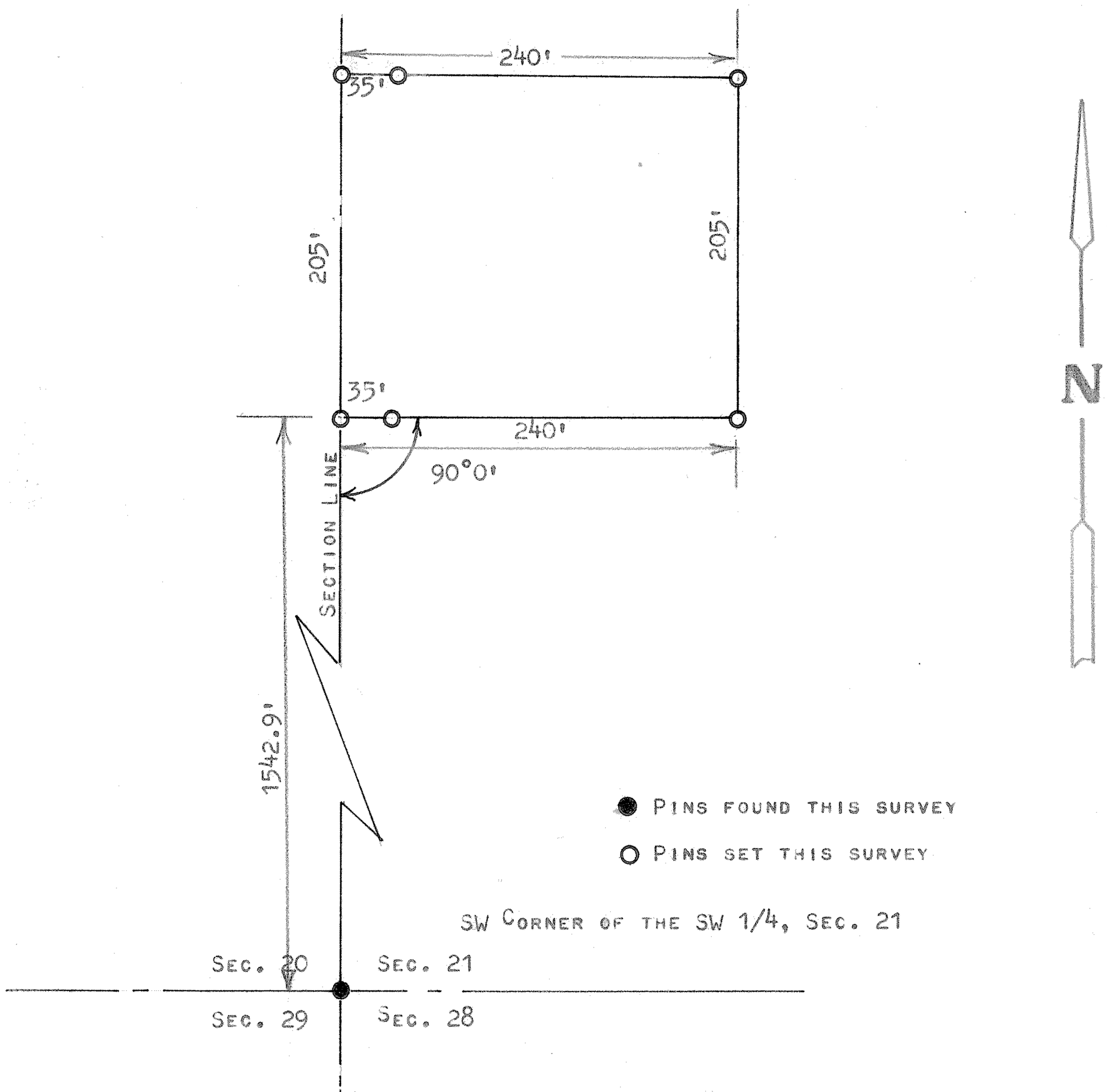


STATE OF KANSAS )
COUNTY OF MCPHERSON ) SS

I, FRANCIS RANKIN, PROFESSIONAL ENGINEER OF THE STATE OF KANSAS, DO HEREBY CERTIFY THAT UNDER MY SUPERVISION A SURVEY WAS MADE OF A TRACT OF LAND IN THE SW 1/4, SECTION 21, T17S R4W OF THE 6TH P.M. AND DESCRIBED AS FOLLOWS.

COMMENCING AT THE SW CORNER OF SAID SW 1/4, SECTION 21, T17S R4W; THENCE NORTH ON SECTION LINE 1542.9 FEET TO PLACE OF BEGINNING; THENCE EAST RIGHT ANGLE FOR 240.0 FEET; THENCE NORTH PARALLEL WITH SECTION LINE 205.0 FEET; THENCE WEST TO SECTION LINE 240.0 FEET; THENCE SOUTH 205.0 FEET TO PLACE OF BEGINNING, SAID TRACT OF LAND CONTAINS 1.13 ACRES MORE OR LESS, AND THAT THE ACCOMPANYING PLAT IS A TRUE EXHIBIT OF SAID SURVEY AS FAR AS IT IS KNOWN TO ME.

SURVEY CALLED FOR BY JAMES JOHNSON

SIGNED THIS 4 DAY OF MAY, 1970

Francis Rankin

FRANCIS RANKIN
PROFESSIONAL ENGINEER
MCPHERSON, KANSAS

F. RANKIN
LICENSED
799
KANSAS
PROFESSIONAL ENGINEER

MICROFILM